Collection:Maple

Installation manual for:

LD6009D17 D17″H13.75″ L4

Installation instructions:

1. Black wire from ceiling(junction box) attaches to "L"wire from the fixture.
2. White wire from ceiling(junction box) attaches to "N"wire from the fixture.
3. "E" wire from the fixture is attaced to the mounting bracket and an additional "E" wire from the mounting bracket must be secured to the junction box.
4. Secure mounting bracket to the junction box.
5. Insert screws（P2） in side of top unit the mounting bracket.
6. Put the shade(P10) on the washer(P11) and use the loop(P9) to screw tighten.
7. Connect the lamp body to chain(P8).
8. Put the canopy(P3) on the nipple(P4) and connect the canopy lock(P7), then use the canopy ring(P6) to screw tighten.
9. Install E12 light source,no include bulb.

The end!

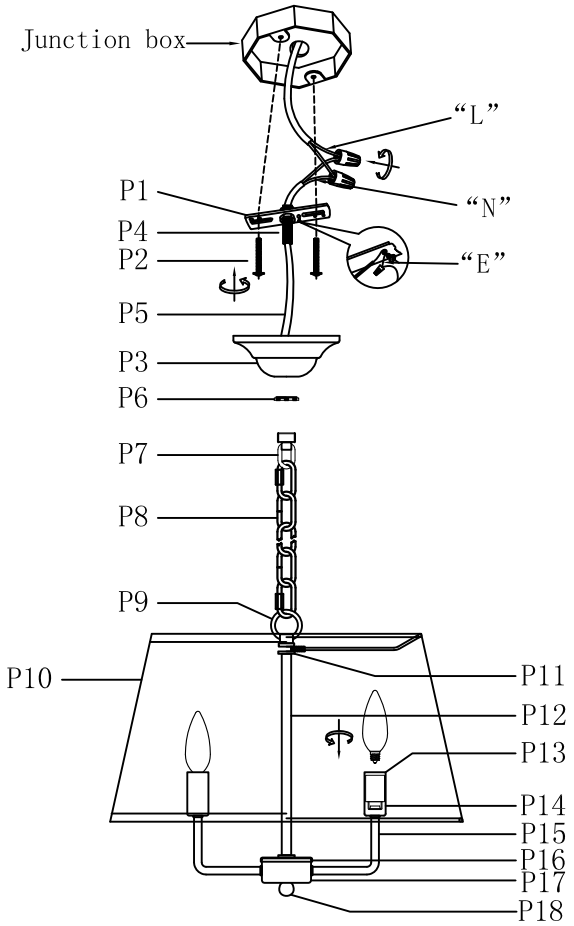

"L" = Hot wire
"N" = Neutral wire
"E" = Ground wire

PARTS LIST

part	picture	Description	Qty	Check list
P1		L4″ Mounting bracket	1	
P2		5/32-32 Screw	2	
P3		D5.1″ Canopy cover	1	
P4		Nipple	1	
P5		Power Cord 8.04',18AWG, SPT-1 Clear/Gold/Black	1	
P6		Canopy ring	1	
P7		Canopy lock	1	
P8		L5'CHAIN04P Plain Design	1	
P9		D1.5″ Loop	1	
P10		D17″*H9″ Lamp shade	1	
P11		Washer	2	
P12		L19.65″ Rod	1	
P13		E12 Socket	4	
P14		Socket cover	4	
P15		L3.74″ Arm	4	
P16		D2.48″ Wire Box	1	
P17		D2.36″ Metal Wire Box	1	
P18		Cap nut	1	